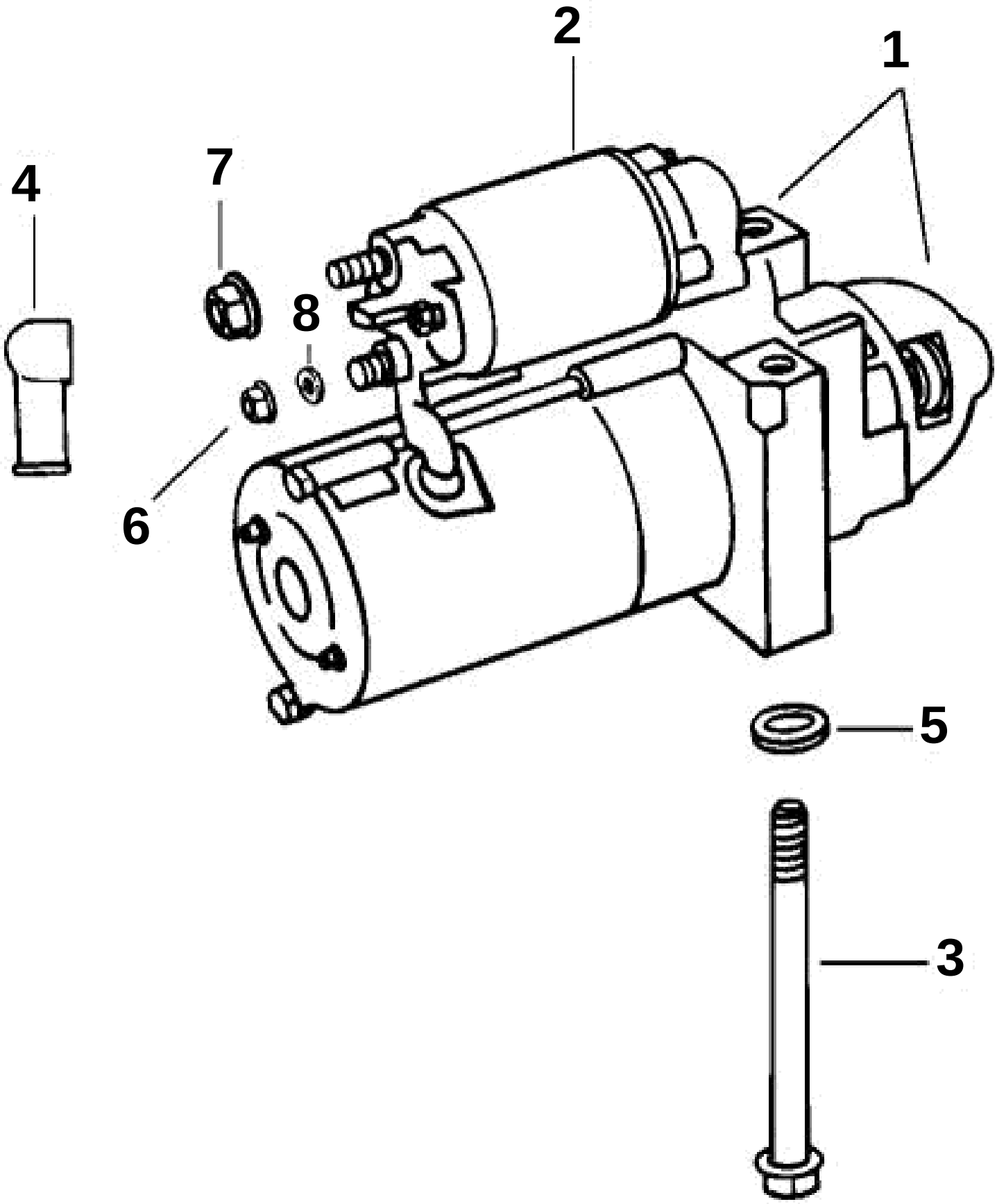
2
1
4
7
8
6
5
3

# STARTER MOTOR

| REF | PART NO. | QTY | DESCRIPTION | NOTES |
|---|---|---|---|---|
| 1 | 3856004 | 1 | Starter motor, Engine | |
| 2 | 3850216 | 1 | · Solenoid | |
| 3 | 3854752 | 2 | · Screw, Starter motor to engine | |
| 4 | 3852487 | 1 | · Protective cap, Battery cable | |
| 5 | 3854496 | 2 | · Washer, Screw, starter motor to engine block | |
| 6 | 3852518 | 2 | · Nut, Starter solenoid | |
| 7 | 3853714 | 1 | · Nut, Battery cable to starter solenoid | |
| 8 | 3852520 | 2 | · Washer, Stud, starter solenoid | |
| | 3852194 | 1 | Screw, Ground, relay, starter | Not shown |